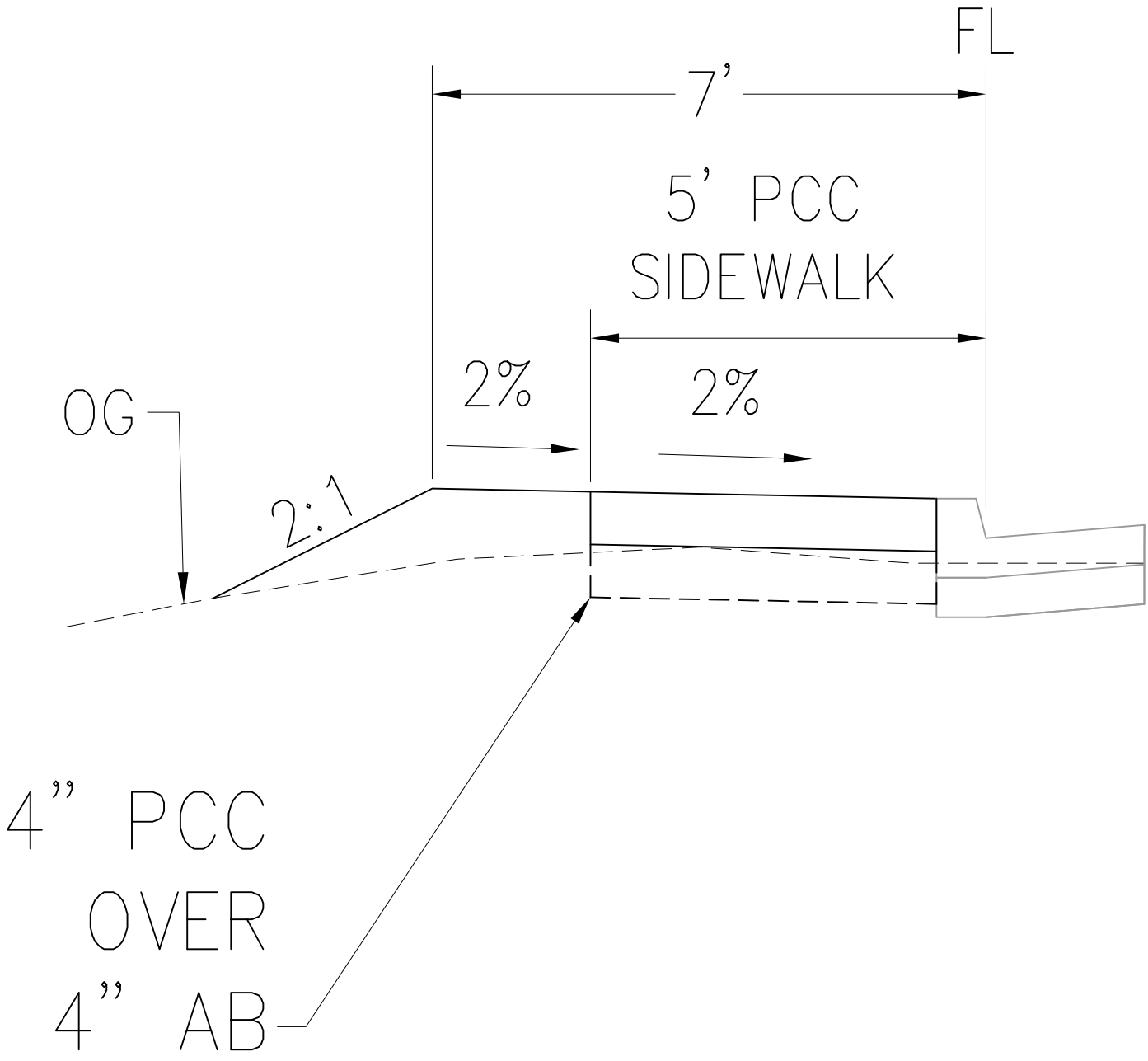

SCALE: NTS

CAMERON PARK DR / LA CANADA DR **INTERSECTION IMPROVEMENT** **TYPICAL SIDEWALK DETAIL**	DESIGNED: DRF DRAWN: DRF CHECKED: DWS DATE: 6/19/08	**PROJECT NO. 72366**	**PAGE 1 of 1**